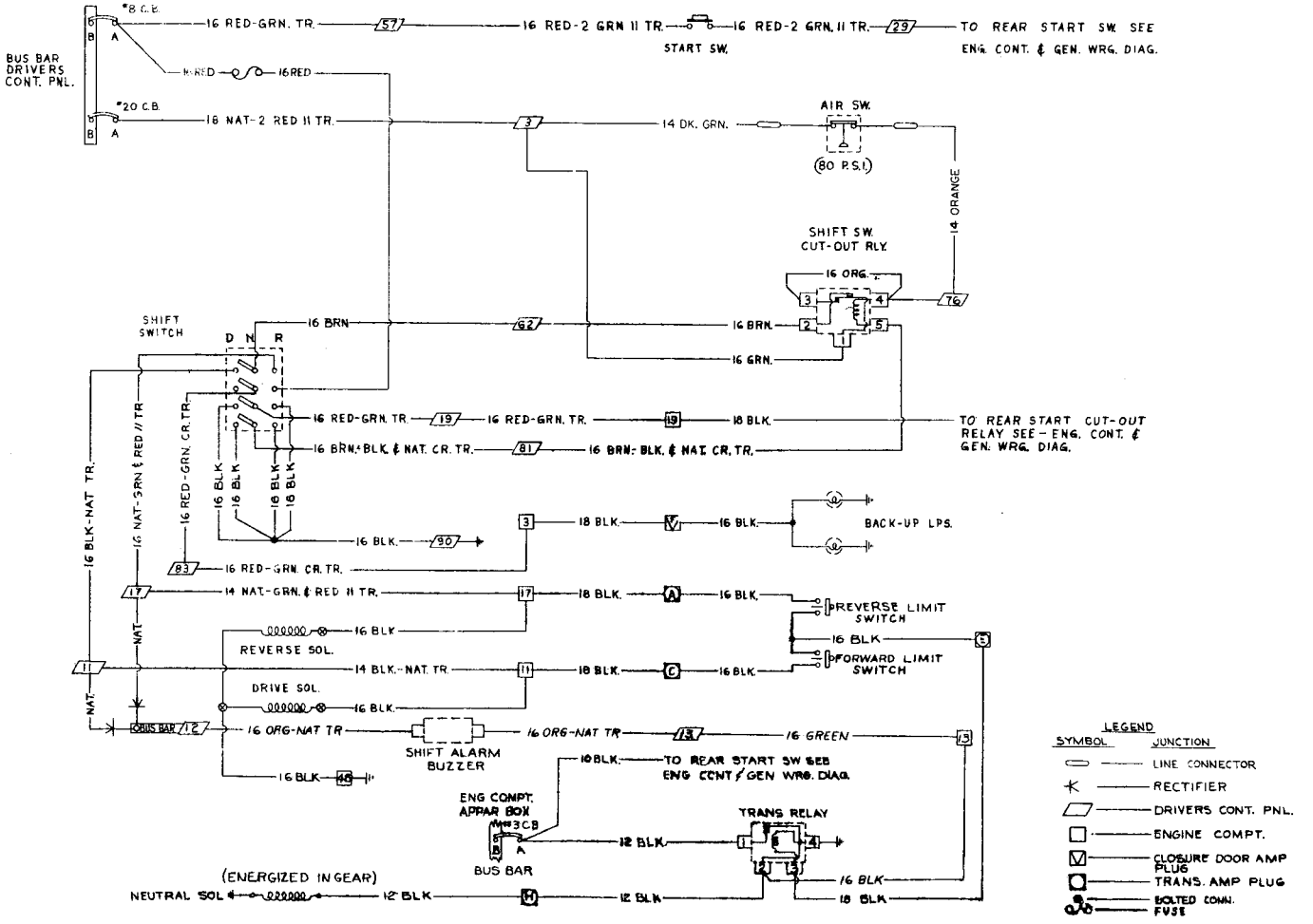
BUS BAR DRIVERS CONT. PNL.
#8 C.B.
16 RED-GRN. TR.
57
16 RED-2 GRN 11 TR.
START SW.
16 RED-2 GRN. 11 TR.
29
TO REAR START SW. SEE ENG. CONT. & GEN. WRG. DIAG.
16 RED
16 RED
#20 C.B.
18 NAT-2 RED 11 TR.
3
14 DK. GRN.
AIR SW.
(80 P.S.I.)
14 ORANGE
SHIFT SW. CUT-OUT RLY.
16 ORG.
76
SHIFT SWITCH
D N R
16 BRN
62
16 BRN.
16 GRN.
16 RED-GRN. TR.
19
16 RED-GRN. TR.
19
18 BLK.
TO REAR START CUT-OUT RELAY SEE - ENG. CONT. & GEN. WRG. DIAG.
16 BRN.-BLK. & NAT. CR. TR.
81
16 BRN.-BLK. & NAT. CR. TR.
16 BLK-NAT TR.
16 NAT-GRN & RED 11 TR
16 RED-GRN. CR. TR.
16 BLK.
16 BLK.
16 BLK.
16 BLK.
16 BLK.
90
3
18 BLK.
V
16 BLK.
BACK-UP LPS.
83
16 RED-GRN. CR. TR.
17
14 NAT-GRN. & RED 11 TR.
17
18 BLK.
A
16 BLK.
REVERSE LIMIT SWITCH
16 BLK
REVERSE SOL.
16 BLK
5
11
14 BLK.-NAT. TR.
11
18 BLK.
C
16 BLK.
FORWARD LIMIT SWITCH
DRIVE SOL.
16 BLK.
NAT.
BUS BAR
12
16 ORG-NAT TR
SHIFT ALARM BUZZER
16 ORG-NAT TR
13
16 GREEN
13
16 BLK.
48
10 BLK.
TO REAR START SW SEE ENG CONT / GEN WRG. DIAG.
ENG COMPT. APPAR BOX
#3 C.B.
BUS BAR
12 BLK.
TRANS RELAY
16 BLK
18 BLK
(ENERGIZED IN GEAR)
NEUTRAL SOL
12 BLK
M
12 BLK
LEGEND
SYMBOL
JUNCTION
LINE CONNECTOR
RECTIFIER
DRIVERS CONT. PNL.
ENGINE COMPT.
CLOSURE DOOR AMP PLUG
TRANS. AMP PLUG
BOLTED CONN.
FUSE